Angular contact spherical plain bearings

As their name implies, the sliding contact surfaces of angular contact spherical plain bearings are spherical in shape and inclined at an angle to the bearing axis (→ **fig. 1**). Consequently, these bearings are well suited for accommodating combined (radial and axial) loads. Single angular contact spherical plain bearings can only accommodate axial loads acting in one direction. These bearings can be separated, enabling the rings to be mounted separately.

SKF manufactures steel/PTFE FRP (fibre reinforced polymer containing PTFE) maintenance-free angular contact spherical plain bearings as standard. Designs with other sliding surface combinations are available on request (→ *Special designs*, starting on **page 154**).

Dimensions

The boundary dimensions of SKF angular contact spherical plain bearings are in accordance with ISO 12240-2:1998.

Tolerances

The dimensional tolerances for SKF angular contact spherical plain bearings are listed in **table 1** and are in accordance with ISO 12240-2:1998.

The symbols used in the tolerance table are explained in the following:

- d nominal bore diameter
- Δ_{dmp} deviation of the mean bore diameter from the nominal
- D nominal outside diameter
- Δ_{Dmp} deviation of the mean outside diameter from the nominal
- Δ_{Bs} deviation of the single inner ring width from the nominal
- Δ_{Cs} deviation of the single outer ring width from the nominal
- Δ_{Ts} deviation of the single bearing width from the nominal

Table 1

Dimensional tolerances for angular contact spherical plain bearings

Nominal diameter d, D		Inner ring Δ_{dmp}		Δ_{Bs}		Outer ring Δ_{Dmp}		Δ_{Cs}		Bearing width Δ_{Ts} [1]	
over	incl.	high	low	high	low	high	low	high	low	high	low
mm		µm		µm		µm		µm		µm	
18	**50**	0	–12	0	–240	0	–14	0	–240	+250	–400
50	**80**	0	–15	0	–300	0	–16	0	–300	+250	–500
80	**120**	0	–20	0	–400	0	–18	0	–400	+250	–600
120	**150**	–	–	–	–	0	–20	0	–500	–	–
150	**180**	–	–	–	–	0	–25	0	–500	–	–

[1] The tolerance of the bearing width depends on d.

Radial internal clearance, preload

The internal clearance of a single angular contact spherical plain bearing is only obtained after mounting and depends on the adjustment against a second bearing that provides axial location in the opposite direction. Angular contact spherical plain bearings are generally mounted as pairs in a back-to-back (→ **fig. 2**) or face-to-face arrangement (→ **fig. 3**). The bearings are adjusted against each other by axially displacing one bearing ring until a specific bearing load of 10 N/mm^2 is obtained. The preload prevents some of the deformations that typically occur under load and after a brief running-in period. When adjusting a new bearing arrangement for the first time, the specific bearing load of 10 N/mm^2 is achieved when the frictional moment and the axial preload force are in the ranges listed in **table 2**.

Table 2

Frictional moment and axial preload force

Bearing	Frictional moment for 10 N/mm^2 min	max	Axial preload force for 10 N/mm^2
–	Nm		N
GAC 25 F	7	9	5 600
GAC 30 F	12	14	7 500
GAC 35 F	16	19	9 300
GAC 40 F	21	25	10 600
GAC 45 F	26	32	13 600
GAC 50 F	31	38	12 900
GAC 60 F	51	62	17 800
GAC 70 F	76	92	21 000
GAC 80 F	105	126	30 000
GAC 90 F	153	184	41 700
GAC 100 F	180	216	39 500
GAC 110 F	273	328	54 500
GAC 120 F	317	380	69 500

Fig. 1

Load line through an angular contact spherical plain bearing

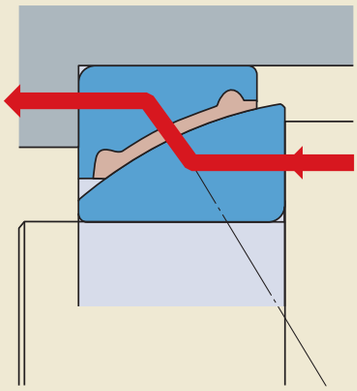

Fig. 2

Angular contact spherical plain bearings, back-to-back arrangement

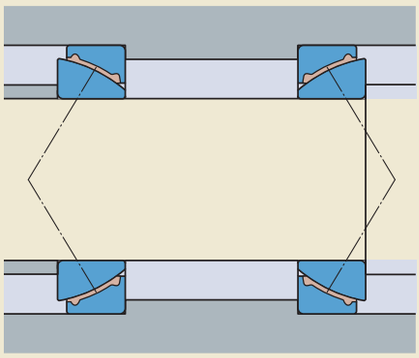

Fig. 3

Angular contact spherical plain bearings, face-to-face arrangement

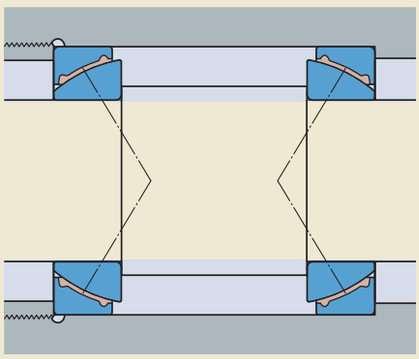

4

Materials

The inner and outer rings of SKF angular contact spherical plain bearings are made of bearing steel that has been through-hardened and ground. The sliding layer of fibre reinforced polymer, containing PTFE, is injection moulded onto the outer ring (→ **fig. 4**). The sliding surface of the inner ring is hard chromium plated and coated with a lithium base grease.

Permissible operating temperature range

Spherical plain bearings with a steel/PTFE FRP sliding contact surface combination can be used for operating temperatures ranging from –40 to +75 °C. For brief periods, temperatures up to 110 °C can be tolerated. However, keep in mind that the load carrying capacity of the bearing is reduced at temperatures that exceed 50 °C. For additional information, contact the SKF application engineering service.

Special designs

Special operating conditions may require angular contact spherical plain bearings with a steel/PTFE fabric or steel/steel sliding contact surface combination. These bearings are available on request.

Bearings with a maintenance-free steel/PTFE fabric sliding contact surface combination (→ **fig. 5**) should be used when lubricant-free operation is specified. These bearings can accommodate heavy loads, preferably in a constant direction.

Steel/steel bearings (→ **fig. 6**) are typically used in applications where operating temperatures or load frequencies are high, or where heavy or shock loads occur. To operate properly, steel/steel bearings must be provided with an adequate supply of lubricant. Depending on the operating conditions, the sliding surface of the outer ring may be equipped with various multi-groove patterns (→ **figs. 7** and **8**). For additional information, contact the SKF application engineering service.

Upon request, inch steel/steel angular contact spherical plain bearings are also available as double direction angular contact spherical plain bearings. Double direction bearings can be used instead of two angular contact bearings in a face-to face arrangement, or as a high capacity

Fig. 4

Maintenance-free angular contact spherical plain bearing, steel/PTFE FRP

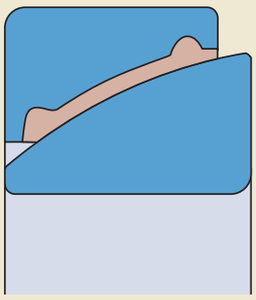

Fig. 5

Maintenance-free angular spherical plain bearing, steel/PTFE fabric

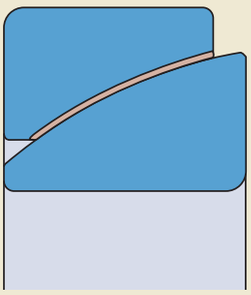

Fig. 6

Angular contact spherical plain bearing, steel/steel, requiring maintenance

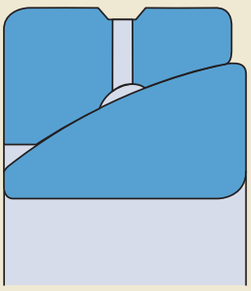

Fig. 7

Angular contact spherical plain bearing with "waffle" grooves, steel/steel

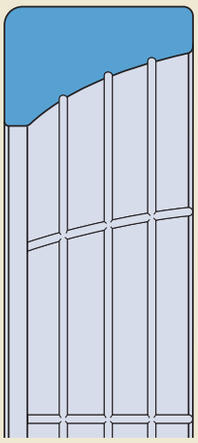

Fig. 8

Angular contact spherical plain bearing with "diamond thread" grooves, steel/steel

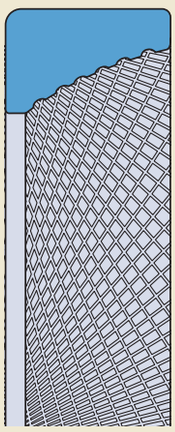

Fig. 9

Double direction angular contact spherical plain bearing in the GEZPR .. S series, steel/steel

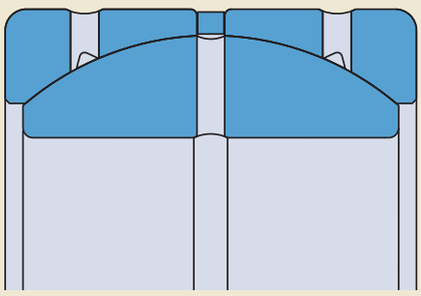

radial bearing. Double direction angular contact spherical plain bearings consist of two outer rings and a standard inner ring. SKF supplies these bearings with (GEZPR .. S series) or without (GEZP .. S series) a shim between the two outer rings. The shim simplifies installation and optimizes axial internal clearance within the bearing (→ **fig. 9**).

Maintenance-free angular contact spherical plain bearings, steel/PTFE FRP
d **25 – 120** mm

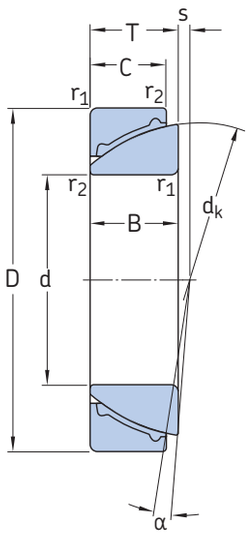

GAC .. F

Principal dimensions			Angle of tilt	Basic load ratings dynamic	static	Mass	Designation
d	D	T	α	C	C_0		
mm			degrees	kN		kg	–
25	47	15	3,5	21,6	34,5	0,14	**GAC 25 F**
30	55	17	3,5	27	43	0,21	**GAC 30 F**
35	62	18	3,5	32,5	52	0,27	**GAC 35 F**
40	68	19	3,5	39	62	0,33	**GAC 40 F**
45	75	20	3	45,5	73,5	0,42	**GAC 45 F**
50	80	20	3	53	85	0,46	**GAC 50 F**
60	95	23	3	69,5	112	0,73	**GAC 60 F**
70	110	25	2,5	88	143	1,05	**GAC 70 F**
80	125	29	2,5	110	176	1,55	**GAC 80 F**
90	140	32	2,5	134	216	2,10	**GAC 90 F**
100	150	32	2	170	270	2,35	**GAC 100 F**
110	170	38	2	200	320	3,70	**GAC 110 F**
120	180	38	1,5	240	380	4,00	**GAC 120 F**

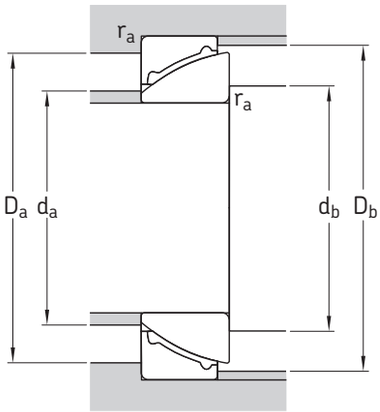

Dimensions							Abutment and fillet dimensions				
d	d_k	B	C	$r_{1\,min}$	$r_{2\,min}$	s	$d_{a\,max}$	$d_{b\,max}$	$D_{a\,min}$	$D_{b\,min}$	$r_{a\,max}$
mm							mm				
25	42	15	14	0,6	0,3	0,6	29	39	34	43	0,6
30	49,5	17	15	1	0,3	1,3	35	45	39	50,5	1
35	55,5	18	16	1	0,3	2,1	40	50	45	56,5	1
40	62	19	17	1	0,3	2,8	45	54	50	63	1
45	68,5	20	18	1	0,3	3,5	51	60	55	69	1
50	74	20	19	1	0,3	4,3	56	67	60	74,5	1
60	88,5	23	21	1,5	0,6	5,7	68	77	70	90	1,5
70	102	25	23	1,5	0,6	7,2	78	92	85	103	1,5
80	115	29	25,5	1,5	0,6	8,6	88	104	95	116	1,5
90	128,5	32	28	2	0,6	10,1	101	118	105	129	2
100	141	32	31	2	0,6	11,6	112	128	120	141	2
110	155	38	34	2,5	0,6	13	124	145	130	156	2,5
120	168	38	37	2,5	0,6	14,5	134	155	140	169	2,5


SKF